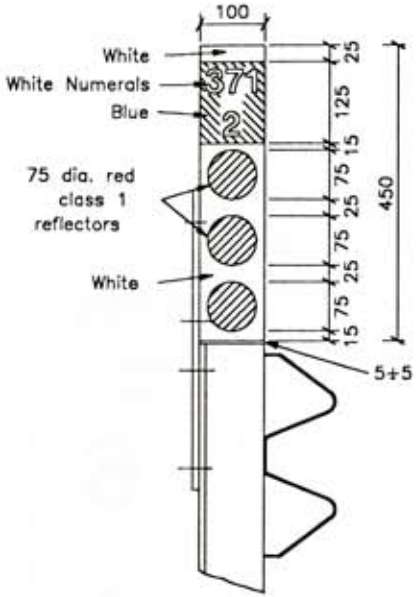

TYPE 8A

Verge markers nearside at emergency crossing points (Traffic face)

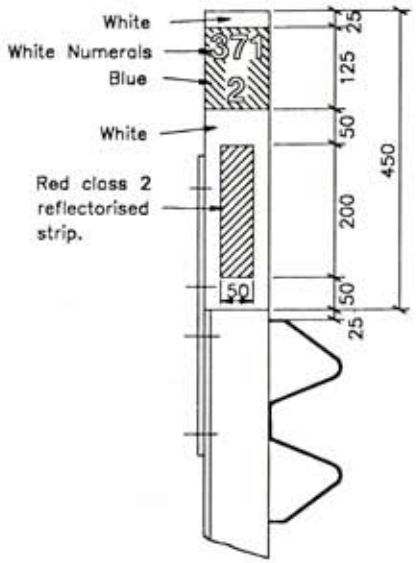

TYPE 8B

Verge markers and slip road verge markers (with numerals omitted),nearside (Traffic face)

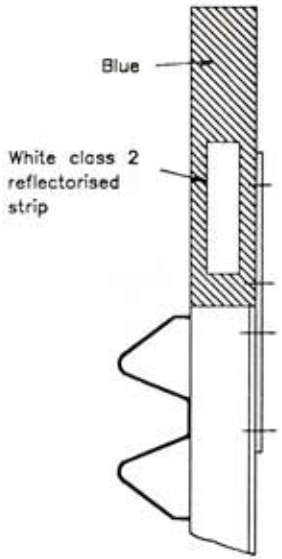

TYPE 8B

Verge markers on off side of slip road (Traffic face)

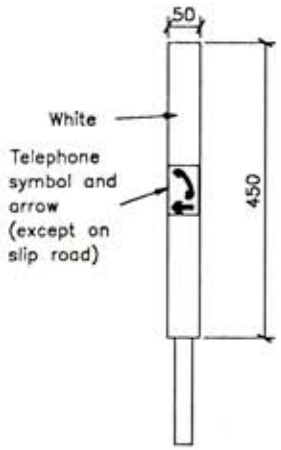

TYPE 8A and 8B

Verge marker (Road face)

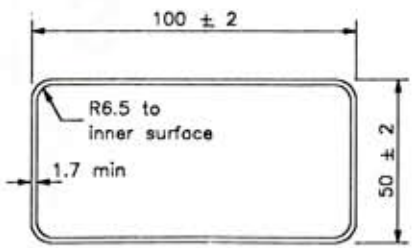

TYPES 8 POST SECTION

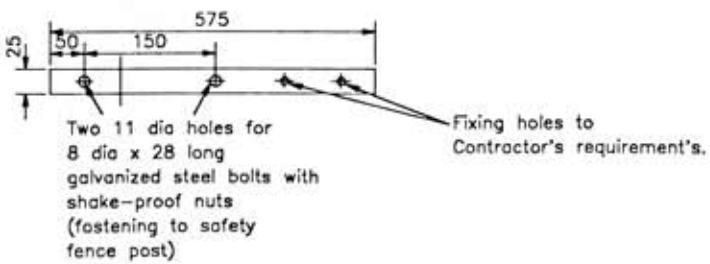

TYPES 8 FIXING STRAP

(Bracket)

NOTES

1. ALL DIMENSIONS ARE IN MILLIMETRES.
2. Type 8 posts are used in place of Types 1, 2 or 3 posts when they are located on motorway safety fences, or the nearside or offside verges of slip roads, not more than 1.5m from the edge of the hardshoulder or hardstrip.
3. See Drawing No. E3 for details of telephone symbol and arrow.
4. Type 8 posts with discs to be installed on both approaches to emergency crossing point. Posts as shown to be fixed not less than 300m from centre of crossing. Similar post but with lower disc omitted to be fixed not less than 200m from centre of crossing and further post with lower two red discs omitted to be fixed not less than 100m from crossing point.
5. Posts are to have PVC closed or capped tops.
6. Fixing straps shall be steel with galvanized finish to BS 729.
7. Post faces are to be white except where shown otherwise.

HIGHWAY CONSTRUCTION DETAILS	DISTANCE MARKER POSTS			SAFETY FENCE MOUNTED POST AND REFLECTORS TYPE 8	Drawing No.
		A	DEC 91		E4
		Issue	Date		